ATDEC Infinite Mounting Possibilities

Technical Specification
AWMS-D13-

Dynamic Monitor Arm on 135 Post

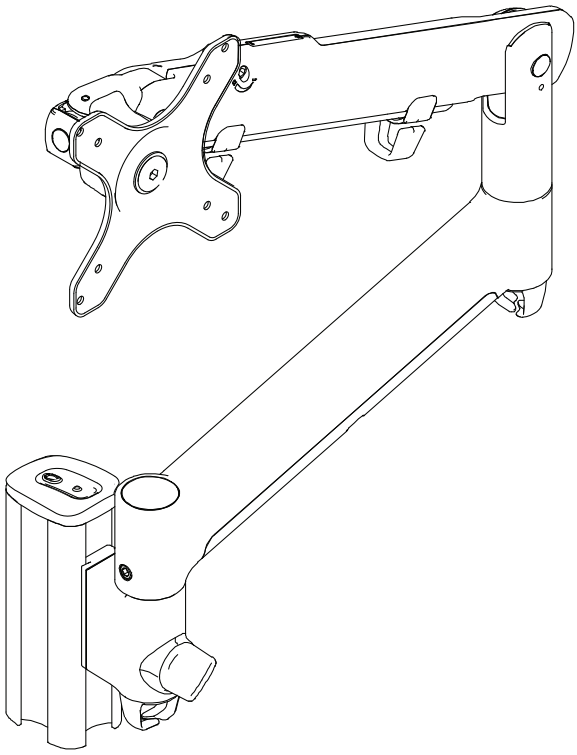

FEATURES

- Adjustable counterbalance to suit a wide range of monitors.
- Tension gauge to make installation of multiple arms faster.
- Integrated 180° rotation limiter to prevent interference with desk mounted panels and dividers.
- Generous cable management guides cables discreetly down the arm to the work surface.

Monitor weight range	0-9kg (0 - 20lb)*
Horizontal Adjustment	618mm (24.33“)
Vertical Adjustment	368mm (14.49”)
Tilt angle	+45 /- 25°
Monitor rotation	360°
VESA mounting	75x75 | 100x100

*Monitor weight should be within the weight range of all modular elements that make up the complete monitor mounting solution.

*Curved monitors, deep devices (such as all-in-one PCs) and offset VESA locations exert additional leverage that can exceed the capacity of the mount even though the monitor weight may be within the stated range. Please contact Atdec if you would like further information.

WARRANTY

10 years limited

MOVEMENT - DYNAMIC ARM

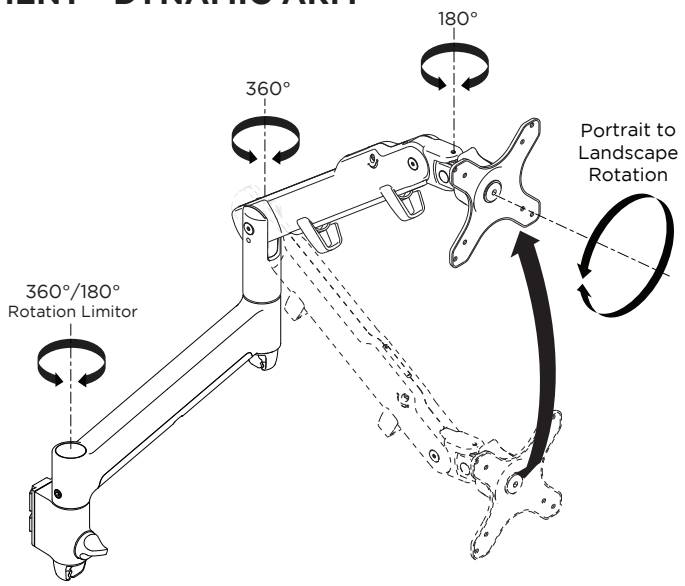

TILT ANGLE

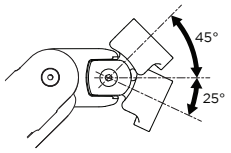

DIMENSIONS - DYNAMIC ARM ON POST

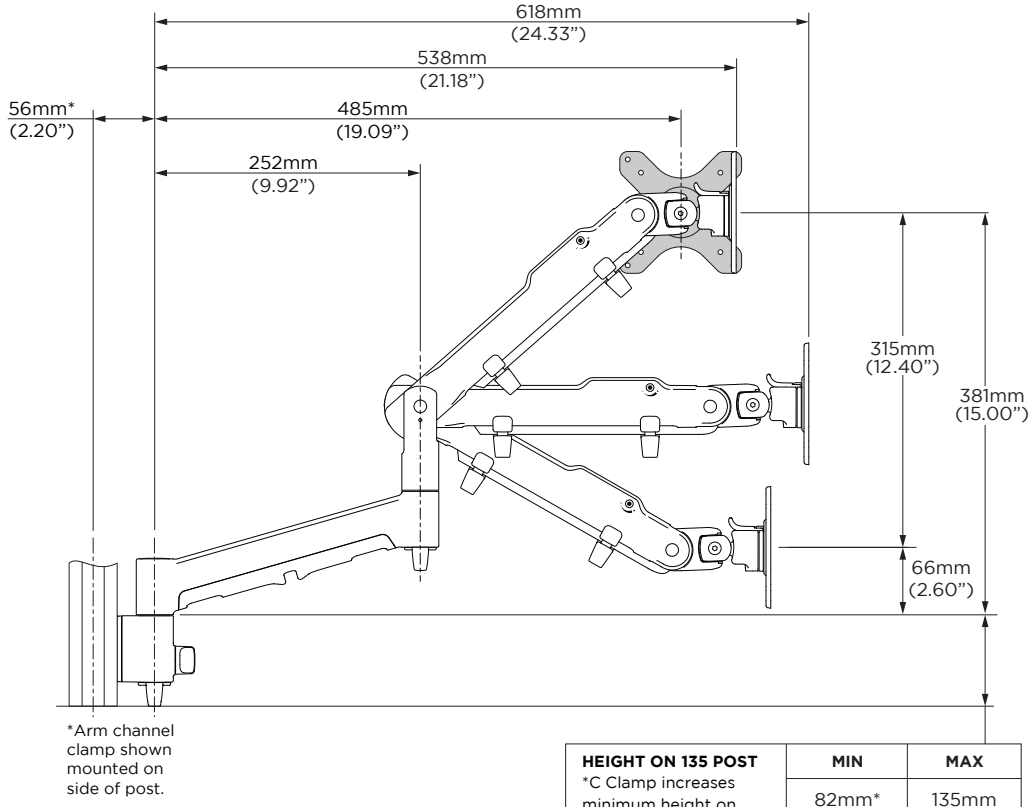

HEIGHT ON 135 POST *C Clamp increases minimum height on post by 26mm (1")	MIN	MAX
	82mm* (3.23")	135mm (5.31")

DIMENSIONS - DYNAMIC ARM ON 135 POST

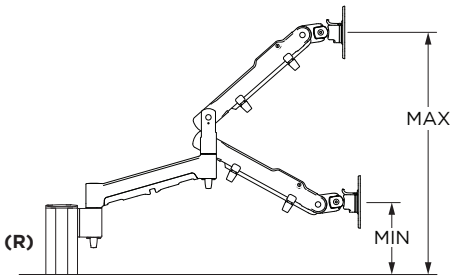

HEIGHT ON 135 POST *C CLAMP INCREASES MINIMUM HEIGHT ON POST BY 26MM (1")	MIN	MAX	RANGE (R)
	132mm* (5.20")	500mm* (19.68")	368mm* (14.49")

DIMENSIONS - DYNAMIC ARM ON POST

POST SIDE ATTACHMENT

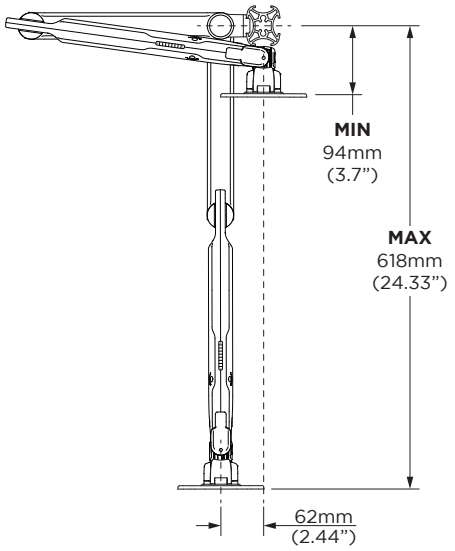

POST FRONT ATTACHMENT

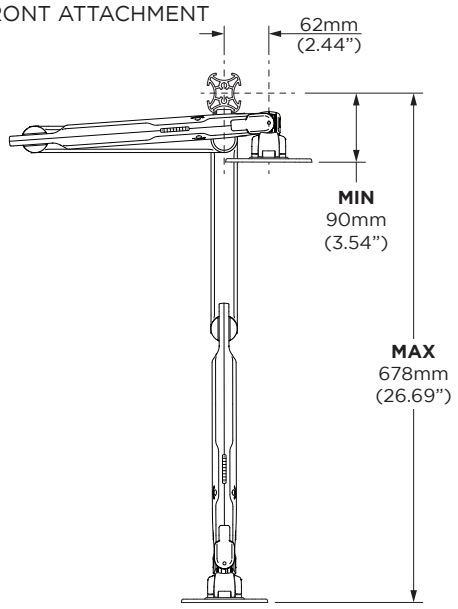

DIMENSIONS - VESA HEAD

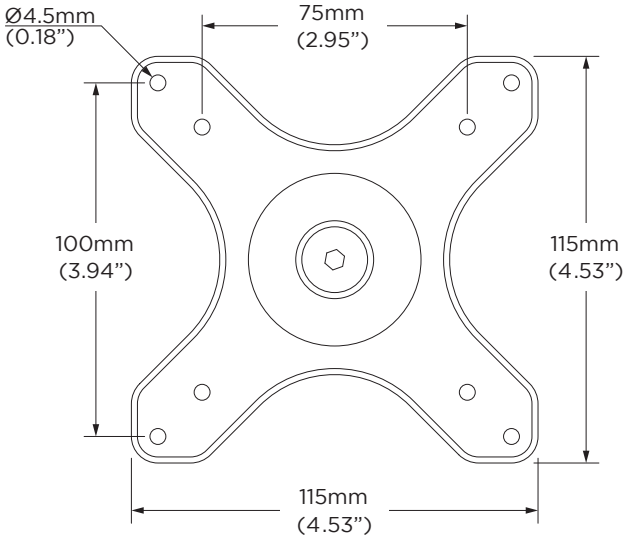

FRONT VIEW

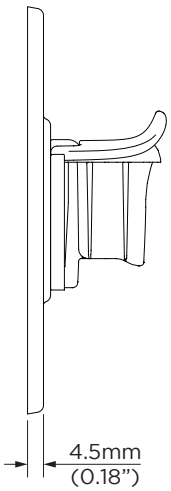

SIDE VIEW

DESK FIXING OPTIONS

Below are the fixing options available for this solution. For more information and detailed specifications for these products please see the separate Technical Specifications available on the Atdec website.
Note: Chosen desk fixing must be added to this solution code when ordering.

BOLT THROUGH AWM-FB

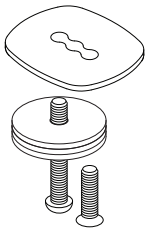

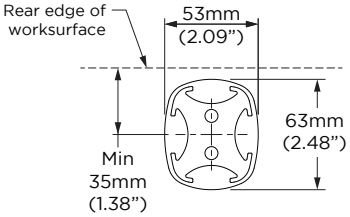

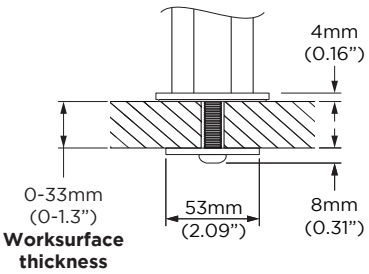

C CLAMP AWM-FC

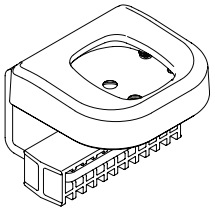

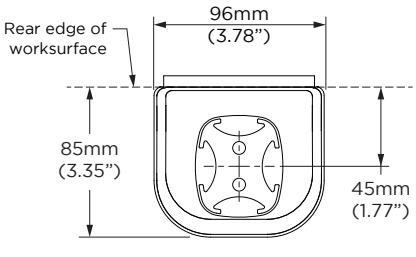

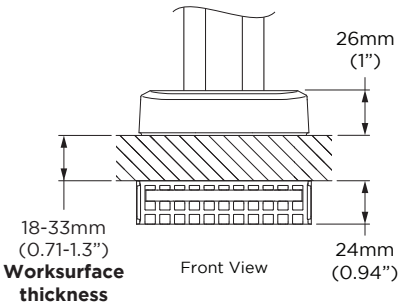

F CLAMP AWM-FF

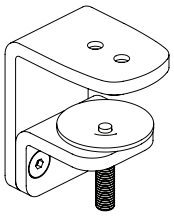

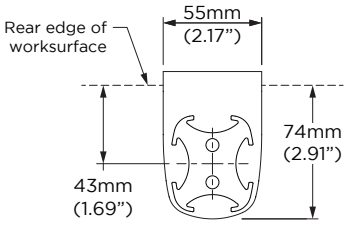

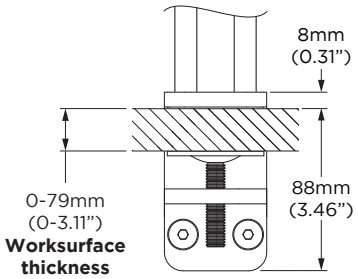

HEAVY DUTY F CLAMP AWM-FH

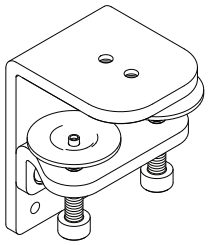

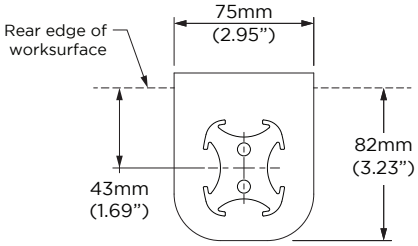

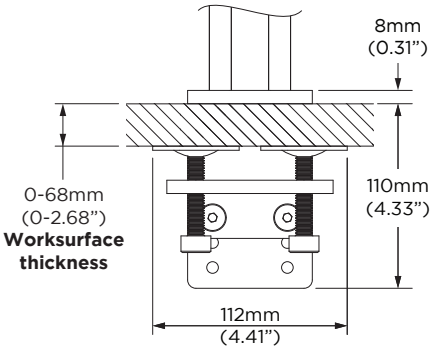

GROMMET CLAMP AC-GC

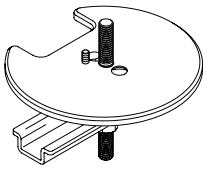

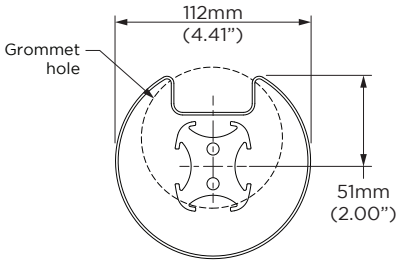

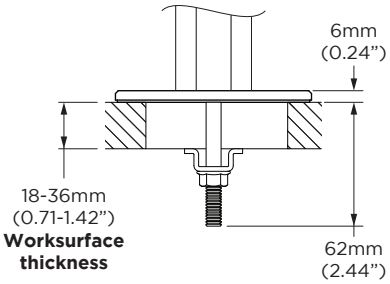

ATDEC

No portion of this document or any artwork contained herein should be reproduced in any way without the express written consent of Atdec Pty Ltd. Due to continuing product development, the manufacturer reserves the right to alter specifications without notice. ©20190320

Please Recycle

atdec.com | atdec.co.uk | atdec.com.au